Double Squeeze™ PE Squeeze Tool

PIPE TOOLS & VISES
SINCE 1896

Applies to: 04336, 04337

PES4DB, PES4DBM Replacement Parts

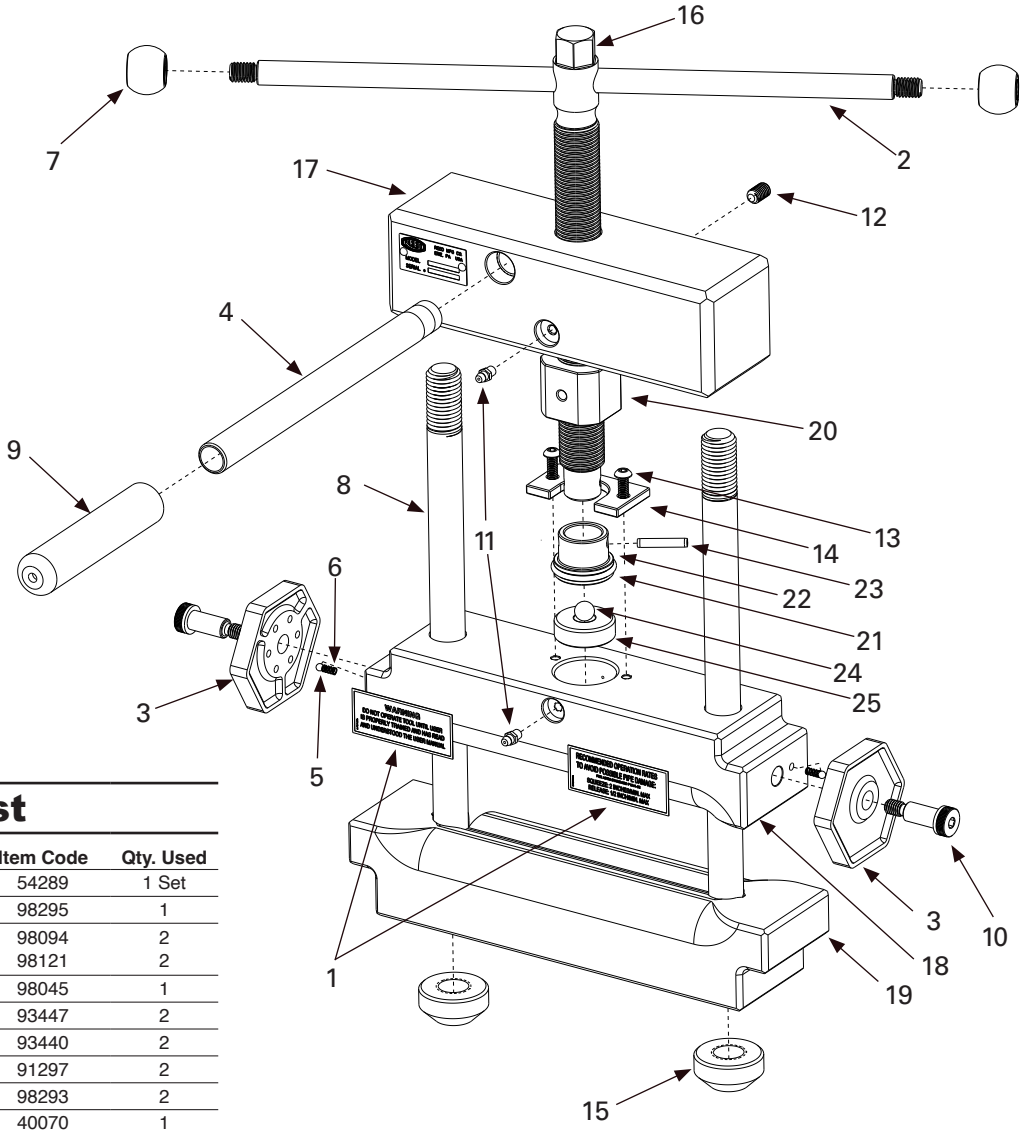

Parts List

Ref. No.	Description	Item Code	Qty. Used
1	PES Sticker A + B	54289	1 Set
2	Screw Handle	98295	1
3	a. Standard Stops - Imperial b. Standard Stops - Metric	98094 98121	2 2
4	Leverage Handle	98045	1
5	Steel Ball	93447	2
6	Spring	93440	2
7	Knob	91297	2
8	Tie Rod	98293	2
9	Leverage Handle Grip	40070	1
10	Shoulder Screw	38314	2
11	Grease Fitting	40338	2
12	Set Screw	40002	1
13	Button Head Screw	40003	2
14	Screw Retainer	98200	1
15	Tie Rod Nut	98096	2
16	ACME Screw *	98208	1
17	Head	98290	1
18	Top Double Bar	98291	1
19	Bottom Double Bar	98292	1
20	ACME Nut	98298	1
	Thrust Package (includes parts 21-25 below)	98296	1
21	O-Ring **	40301	1
22	Screw Adapter	-	1
23	Spring Pin **	40001	1
24	Ball	-	1
25	Thrust Block	-	1

* Keep ACME screw well-greased (high-pressure)
**O-Ring #40301 and Spring Pin #40001 are available individually or as part of Thrust Package

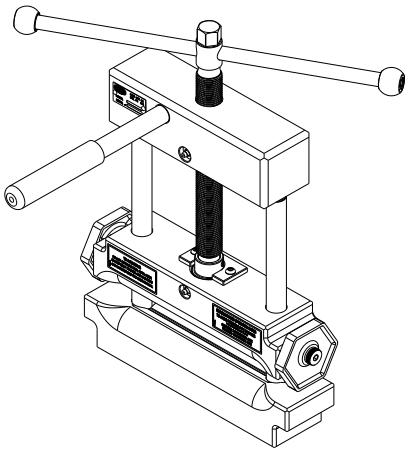

Reed Manufacturing
1425 West 8th Street
Erie, PA 16502 USA

QUALITY & Service that Last a Lifetime

Phone: 800-666-3691 or +1 814-452-3691
reedsales@reedmfgco.com
www.reedmfgco.com